MW03S-FIN
WALL MIXER TRIM KIT

meir®

FEATURES

- Refer to the Meir website for warranty terms & conditions, and available finishes
- Flow rate 18L p/m at 3 bar pressure.
- European components and cartridge
- Reinforced rubber seal and lining
- Solid brass construction
- Box Weight 1 Kg

CARE

- Do not install tapware using any form of acetone silicones.
- Do not apply physical items (such as tools)directlytoproduct.
- Never use house-hold or commercial detergents, citrus based cleaners, or abrasive cleaners.
- Clean using a mild washing soap solution rinsed, and dry with a soft cloth.
- Check for any product defects before installation.
- Refer to the installation manual for correct installation.

SPECIFICATIONS

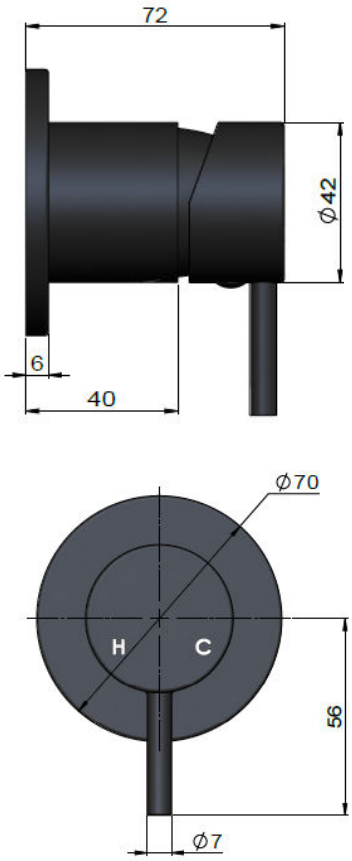

TOLERANCES

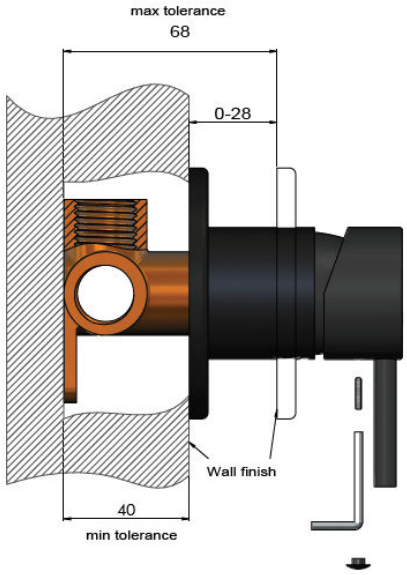

FLOW RATE GRAPH

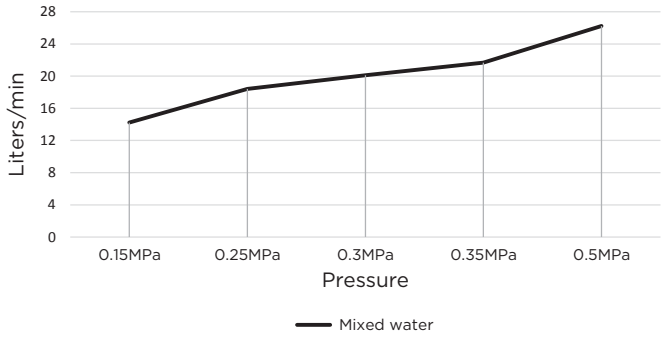

CREDENTIALS

- Watermark AS/NZS 3718WMKA25013

EXPLODED VIEW
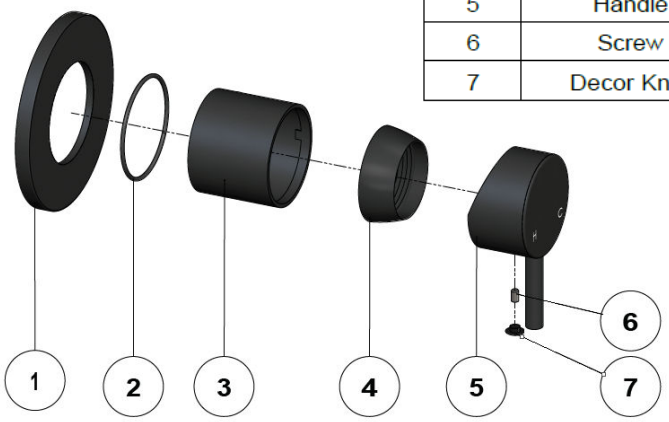
No. Item	Part Name
1	Back Plate
2	O-Ring
3	Copper Sleeve
4	Decor Cover
5	Handle
6	Screw
7	Decor Knob