MR01- R
ROUND DOUBLE RAIL

meir®

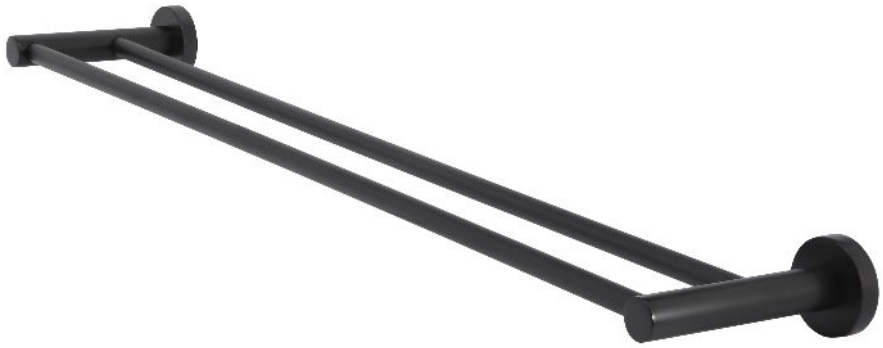

EXPLODED VIEW

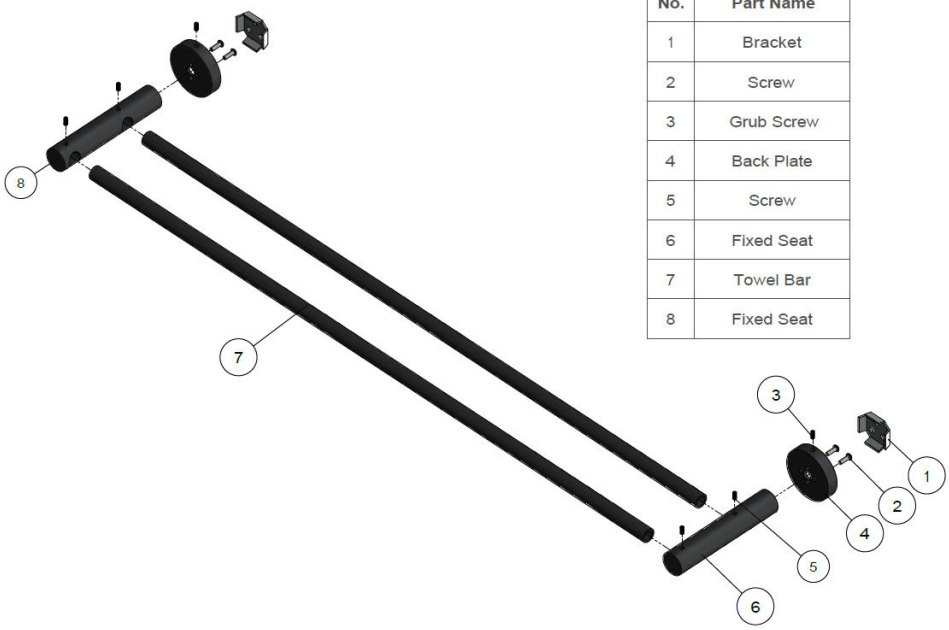

No.	Part Name
1	Bracket
2	Screw
3	Grub Screw
4	Back Plate
5	Screw
6	Fixed Seat
7	Towel Bar
8	Fixed Seat

CARE

- Do not install tapware using any form of acetone silicones.
- Do not apply physical items (such as tools) directly to product.
- Never use house-hold or commercial detergents, citrus based cleaners, or abrasive cleaners.
- Clean using a mild washing soap solution rinsed, and dry with a soft cloth.
- Check for any product defects before installation.
- Refer to the installation manual for correct installation.

FEATURES

- Refer to the Meir website for warranty terms & conditions, and available finishes (excluding chrome)
- Solid brass construction
- Box Weight 0.9 kg
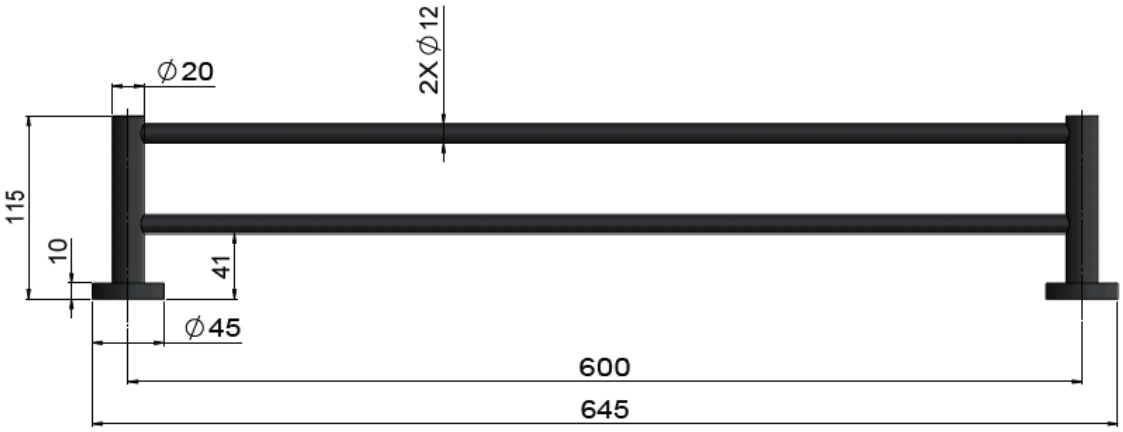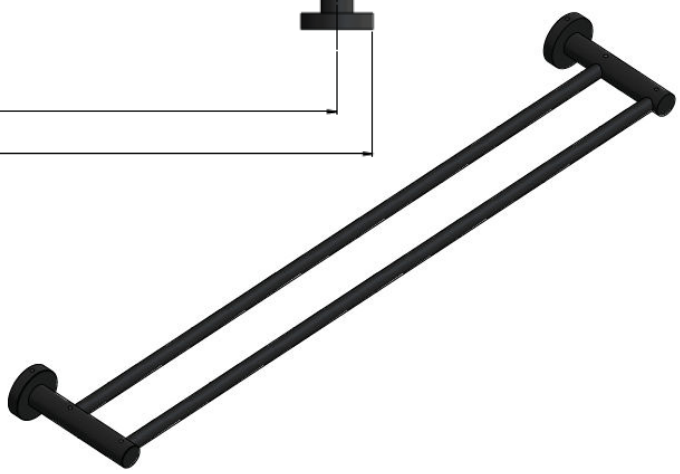
SPECIFICATIONS