MK02
KITCHEN MIXER

meir®

FEATURES

- Refer to the Meir website for warranty terms & conditions, and available finishes.
- Flow rate **6** L p/m at 3 bar pressure.
- European components and cartridge
- Solid brass construction
- Box Weight 2.1 Kg

CARE

- Do not install tapware using any form of acetone silicones.
- Do not apply physical items (such as tools) directly to product.
- Never use house-hold or commercial detergents, citrus based cleaners, or abrasive cleaners.
- Clean using a mild washing soap solution rinsed, and dry with a soft cloth.
- Check for any product defects before installation.
- Refer to the installation manual for correct installation.

SPECIFICATIONS

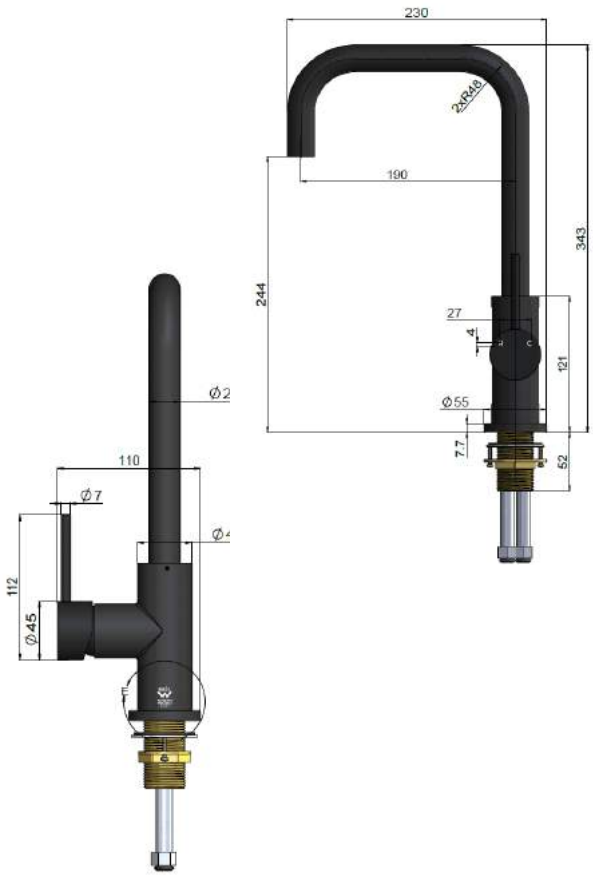

TOLERANCES

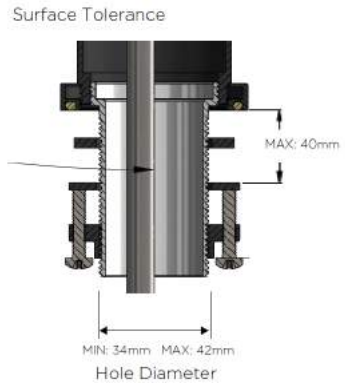

FLOW RATE GRAPH

Test pressure	0.15MPa	0.25MPa	0.3MPa	0.35MPa	0.5MPa
Mixed water - mixer	7.23	6.12	5.96	6.17	6.75

Flowchart

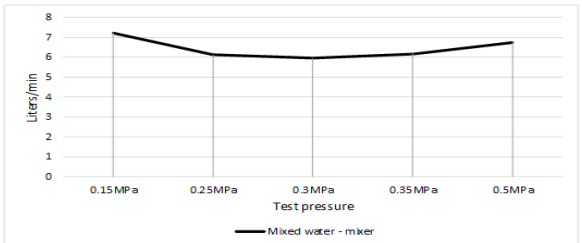

CREDENTIALS

- Watermark AS/NZS3718WMKA25013
- 5-star WELS rated
- 6 litres p/minute
- WELS registration No: T36450

EXPLODED VIEW

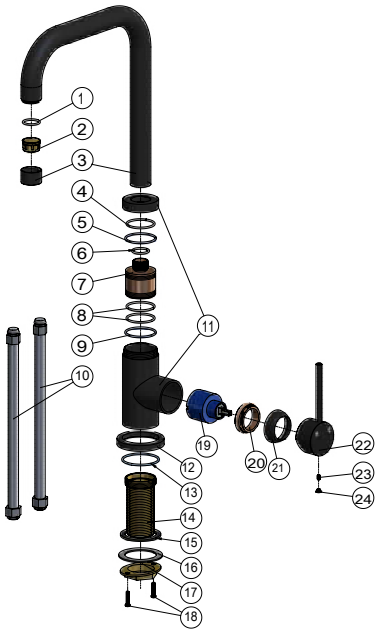

N0.	Part Number
1	O-ring
2	Aerator
3	Spout
4	O-ring
5	Wear-resisting ring
6	O-ring
7	Connector
8	O-ring
9	Wear-resisting ring
10	Inlet hose
11	Body
12	Base
13	O-ring
14	Thread tube
15	Flat rubber washer
16	Washer
17	Mout nut
18	Bolt
19	D35 cartridge
20	Nut
21	Decor cover
22	Handle
23	Screw
24	Decor Knob