MB03XS
Small Basin Mixer

meir®

FEATURES

- Refer to the Meir website for warranty terms & conditions, and available finishes.
- Flow rate **6**L p/m at 3 bar pressure.
- European components and cartridge
- Solid brass construction
- Box Weight 1.5 Kg

CARE

- Do not install tapware using any form of acetone silicones.
- Do not apply physical items (such as tools) directly to product.
- Never use house-hold or commercial detergents, citrus based cleaners, or abrasive cleaners.
- Clean using a mild washing soap solution rinsed, and dry with a soft cloth.
- Check for any product defects before installation.
- Refer to the installation manual for correct installation.

SPECIFICATIONS

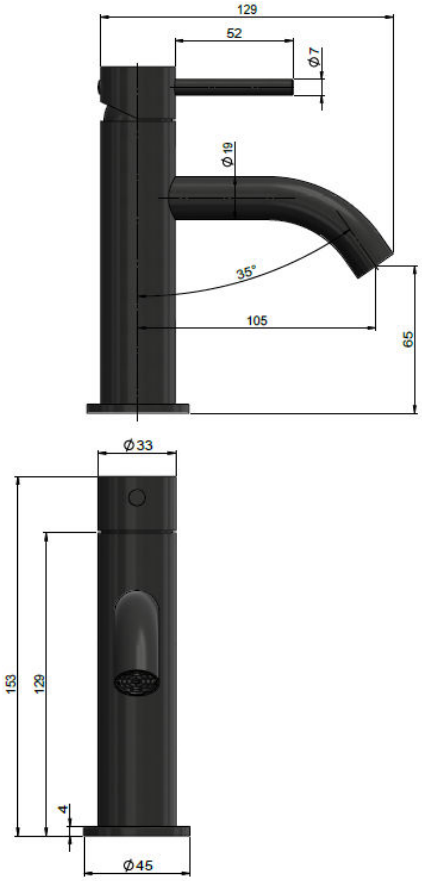

TOLERANCES

Mounting Surface Tolerance

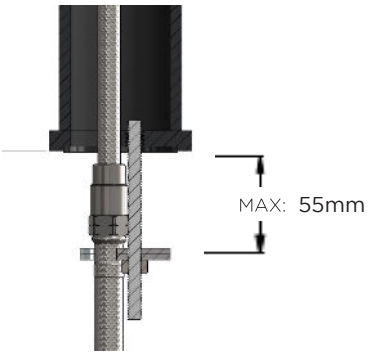

Hole Diameter
MIN: 30mm MAX: 35mm

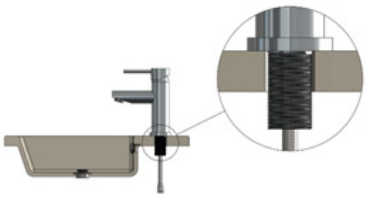

FLOW RATE GRAPH

Test pressure	0.15MPa	0.25MPa	0.3MPa	0.35MPa	0.5MPa
Mixed water - basin mixer	5.5	6.16	6.23	6.25	6.38

Flowchart

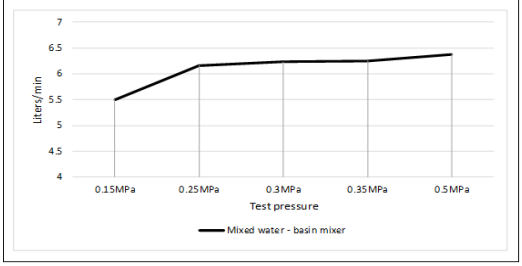

EXPLODED VIEW

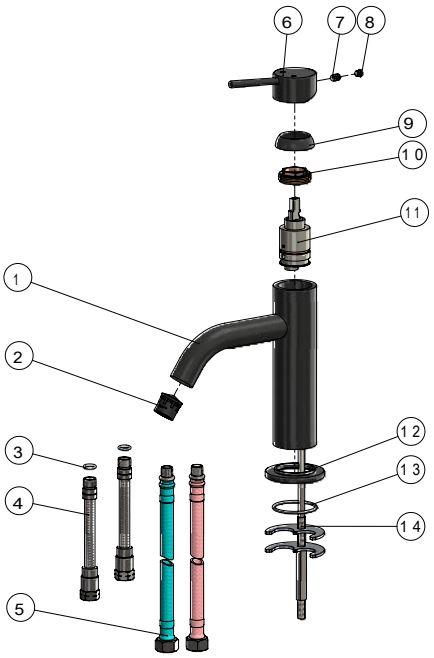

No.	Part Name	Qty
1	Body	1
2	Aerator	1
3	O-ring	2
4	Inlet Tube	2
5	Inlet Hose	2
6	Handle	1
7	Screw	1
8	Decorate Button	1
9	Decorate Cover	1
10	Nut	1
11	D25 Cartridge	1
12	Base	1
13	O-ring	1
14	Install Fittings	1

CREDENTIALS

- Watermark AS/NZS3718WMKA25013
- 5-star WELS rated
- 5.5 lltres p/minute
- WELS registration No: T35595
- KUKreg4 certified