MB03
BASIN MIXER

meir®

FEATURES

- Refer to the Meir website for warranty terms & conditions, and available finishes.
- Flow rate 5L p/m at 3 bar pressure.
- European ceramic cartridge
- Solid brass construction
- Box Weight 1.6 kg

CARE

- Do not install tapware using any form of acetone silicones.
- Do not apply physical items (such as tools) directly to product.
- Never use house-hold or commercial detergents, citrus based cleaners, or abrasive cleaners.
- Clean using a mild washing soap solution rinsed, and dry with a soft cloth.
- Check for any product defects before installation.
- Refer to the installation manual for correct installation.

SPECIFICATIONS

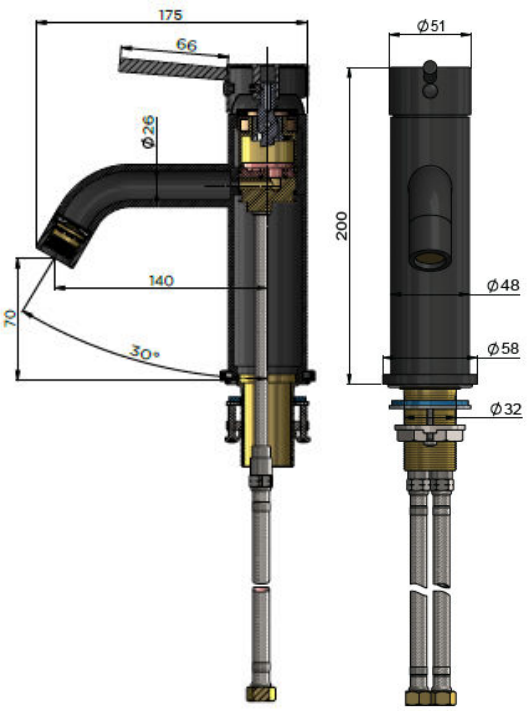

TOLERANCES

Surface Tolerance

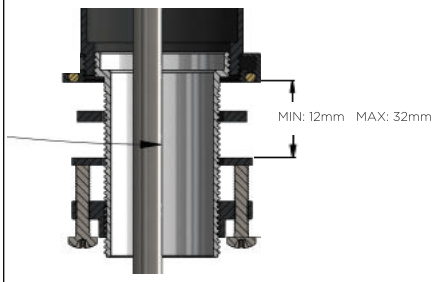

Hole Diameter

MIN: 34mm MAX: 42mm

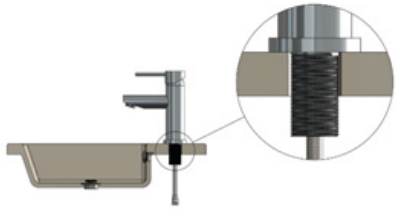

FLOW RATE GRAPH

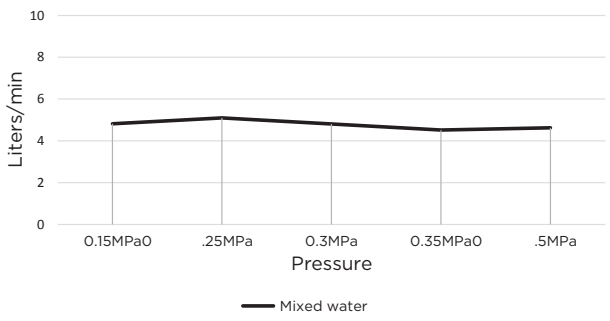

CREDENTIALS

- WaterMark AS/NZS 3718:2005
- 5-star WELS rated
- 6 litres p/minute
- WELS registration No: T37608
- KUKreg4 certified

EXPLODED VIEW

No.	Part Name
1	Decor Knob
2	Screw
3	Handle
4	Decor Cover
5	Nut
6	D40 Cartridge
7	Flat Washer
8	Aerator
9	Body
10	Base
1	O-ring
12	Thread Tube
13	Flat Washer
14	Washer
15	Bolt
16	Mount Nut
17	O-ring
18	Connecting Tube
19	Inlet Hose